Multiple Integrals

What is the geometric interpretation of integration? If you know calculus, you will know that integration gives you the area under a curve. In other words, given a curve $f(x)$, you can use integration to calculate the area bounded by the curve and x-axis. Let's make this analogy further. Could we calculate volume using integration? The answer is yes. See Fig. 1. Consider we have a function $z = f(x, y)$ and we want to know the volume bounded by $z = 0$, $z = f(x, y)$, $x = a$, $x = b$, $y = c$, $y = d$. We can obtain it by two methods. First, we can slice the volume parallel to x-axis as in Fig.2 For simplicity we have shown only two slices. Each slice has the following area:

$$\int_a^b f(x, y)dx \tag{1}$$

To obtain the full volume, we have to integrate the areas. So, we have:

$$V = \int_c^d \left(\int_a^b f(x, y)dx \right) dy \tag{2}$$

Second, we can slice the volume parallel to y-axis as in Fig. 3. Again, for simplicity, we have shown only two slices. Each slice has the following area:

$$\int_c^d f(x, y)\, dy \tag{3}$$

Again, to obtain the full volume, we have to integrate the areas. So, we have:

$$V = \int_a^b \left(\int_c^d f(x, y)dy \right) dx \tag{4}$$

Since the volume should not depend on how we slice it and sum its pieces altogether, (2) and (4) must be same. Therefore, if there is no confusion, we can take off the parenthesis and express the volume as follows:

$$V = \int_c^d \int_a^b f(x, y)\, dx\, dy = \int_a^b \int_c^d f(x, y)\, dy\, dx \tag{5}$$

This is an example of double integral, since we have integrated twice. However, it is easy to imagine that we can integrate as many times as we

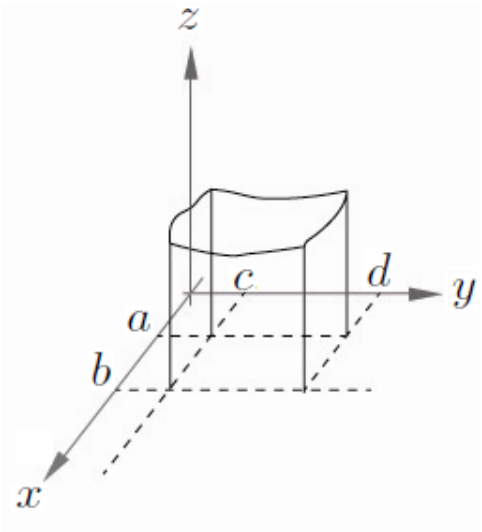

Figure 1

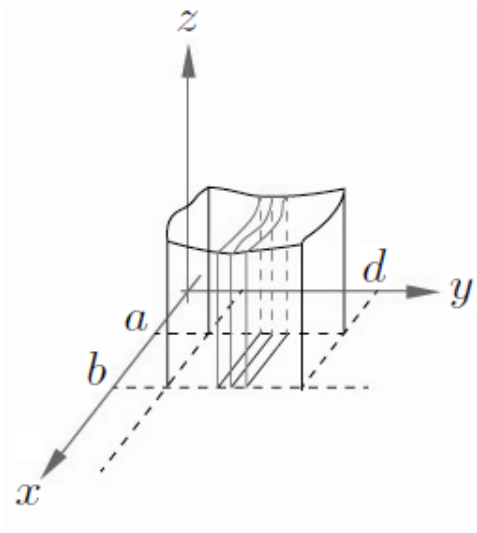

Figure 2

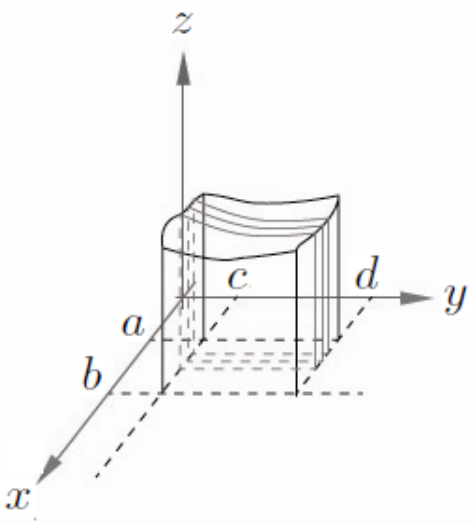

Figure 3

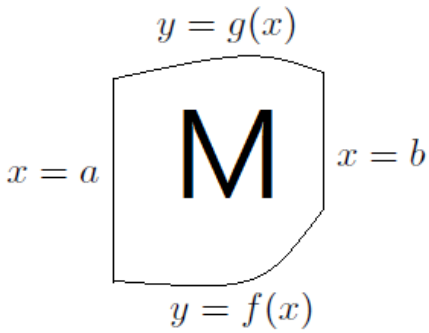

Figure 4

want. For example, let's consider that we have air in rectangular bag and the density of air is a function of position given as $\rho(x, y, z)$. Then, what would be the total mass inside the bag? It is easy to see that for a small volume $\Delta x \Delta y \Delta z$, the mass should be $\rho(x, y, z)\Delta x \Delta y \Delta z$. Therefore, the total mass will be the following:

$$M = \int_{z_1}^{z_2} \int_{y_1}^{y_2} \int_{x_1}^{x_2} \rho(x, y, z)\, dx\, dy\, dz \tag{6}$$

Sometimes, dV is used to denote $dx\, dy\, dz$, since it is infinitesimal volume element. Using this notation, the mass of the air can be expressed as follows:

$$M = \int \rho dV \tag{7}$$

Let me also mention that the range of region in which the integration is performed doesn't necessarily have to be rectangular as we considered so far. See Fig.4. The integration range denoted by M is given as follows.

$$\int_{x=a}^{x=b} \left(\int_{y=f(x)}^{y=g(x)} dy \right) dx \tag{8}$$

Notice also that here we integrate y first, then x. We could integrate x first, but in such a case we would need to find the inverse of functions f and g, so that we can express $x = f^{-1}(y)$ and $x = g^{-1}(y)$ which are unnecessarily complicated.

All this seems somewhat abstract without an example. Therefore, let me present you an example which I found from Wikipedia. Suppose the integration range D is the region bounded by $x = 0$, $y = 1$, and $y = x^2$. See Fig.5. Then, what is the following integral?

$$\int \int_D (x + y)\, dx\, dy \tag{9}$$

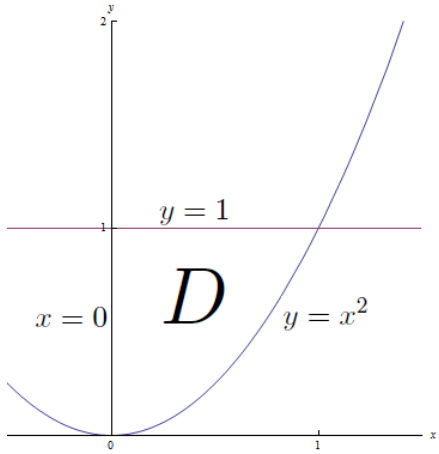

Figure 5: Integration range D

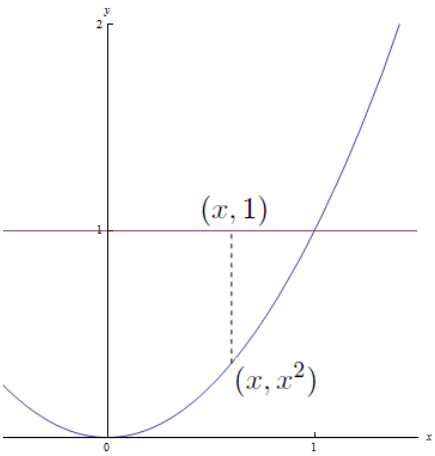

Figure 6: y integration first

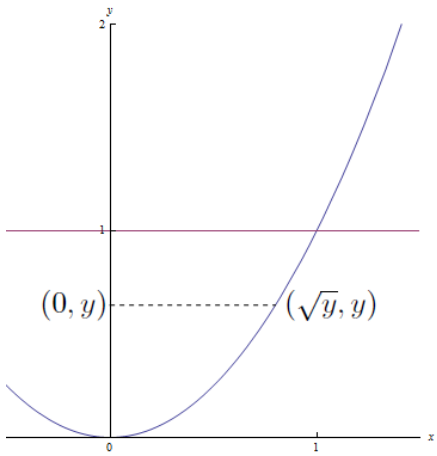

Figure 7: x integration first

We can solve this problem by two ways: we can integrate y first or we can integrate x first. In the first case, we first fix x and find the range of y. See Fig.6. For a fixed x, y runs from x^2 to 1. Furthermore, the whole region of D is inside $x = 0$ and $x = 1$. Therefore, we have:

$$\begin{aligned}\int_0^1 \left(\int_{x^2}^1 (x+y)\, dy \right) dx &= \int_0^1 \left(\left[xy + \frac{y^2}{2} \right]_{y=x^2}^{y=1} \right) dx \\ &= \int_0^1 \left(x + \frac{1}{2} - x^3 - \frac{x^4}{4} \right) dx = \frac{13}{20} \end{aligned} \tag{10}$$

Notice also that from the first line to the second line the integrand loses y-dependence as you perform y-integration; there is no y in the second line. In the final step, the answer loses x-dependence as well as you perform x-integration; the final answer is a pure number.

Now, the second way. We first fix y and find the range of x. See Fig.7. For a fixed y, x runs from 0 to $\sqrt{y}$. Furthermore, the whole region of D is inside $y = 0$ and $y = 1$. Therefore, we have:

$$\begin{aligned}\int_0^1 \int_0^{\sqrt{y}} (x+y)\, dx\, dy &= \int_0^1 \left(\left[\frac{x^2}{2} + yx \right]_{x=0}^{x=\sqrt{y}} \right) dy \\ &= \int_0^1 \left(\frac{y}{2} + y\sqrt{y} \right) dy = \frac{13}{20} \end{aligned} \tag{11}$$

The answer is same as before. Notice also that from the first line to the second line the integrand loses x-dependence as you perform x-integration; there is no x in the second line. In the final step, the answer loses y-dependence as well as you perform y-integration; the final answer is a pure number.

Problem 1. Calculate the following.

$$\int_{-1}^2 \int_0^1 3x^2 y\, dx\, dy = \int_{-1}^2 \left(\int_0^1 3x^2 y\, dx \right) dy = ? \tag{12}$$

Problem 2. Calculate the following.

$$\int_N \int (x + 2y)\, dx\, dy \tag{13}$$

where N is the integration range bounded by $x = 0$, $y = 0$, $x + y = 1$. You can perform this integration in two ways; performing x integration first, then performing y integration, or performing y integration first, then performing x integration. Try both ways and check that the answers are same. (Hint[1])

[1] First draw N. Then, consider (8) and think about what a, b, $f(x)$, and $g(x)$ should be in the case in which you perform y integration for N. In the case in which you perform x integration first for N, it should be something like $\int_{y=c}^{y=d} \int_{x=t(y)}^{x=s(y)} dx\, dy$

Summary

- Something integrated by a certain variable can be re-integrated by different variables. This is multiple integral.
- It is guaranteed that the value for the multiple integration doesn't depend on which order you integrate, as long as the integration range is same, and suitably expressed as functions of the variables.
- Nevertheless, some suitably chosen integration order may be easier than other ones to calculate.